Yamamoto Rock Machine CO.,LTD.

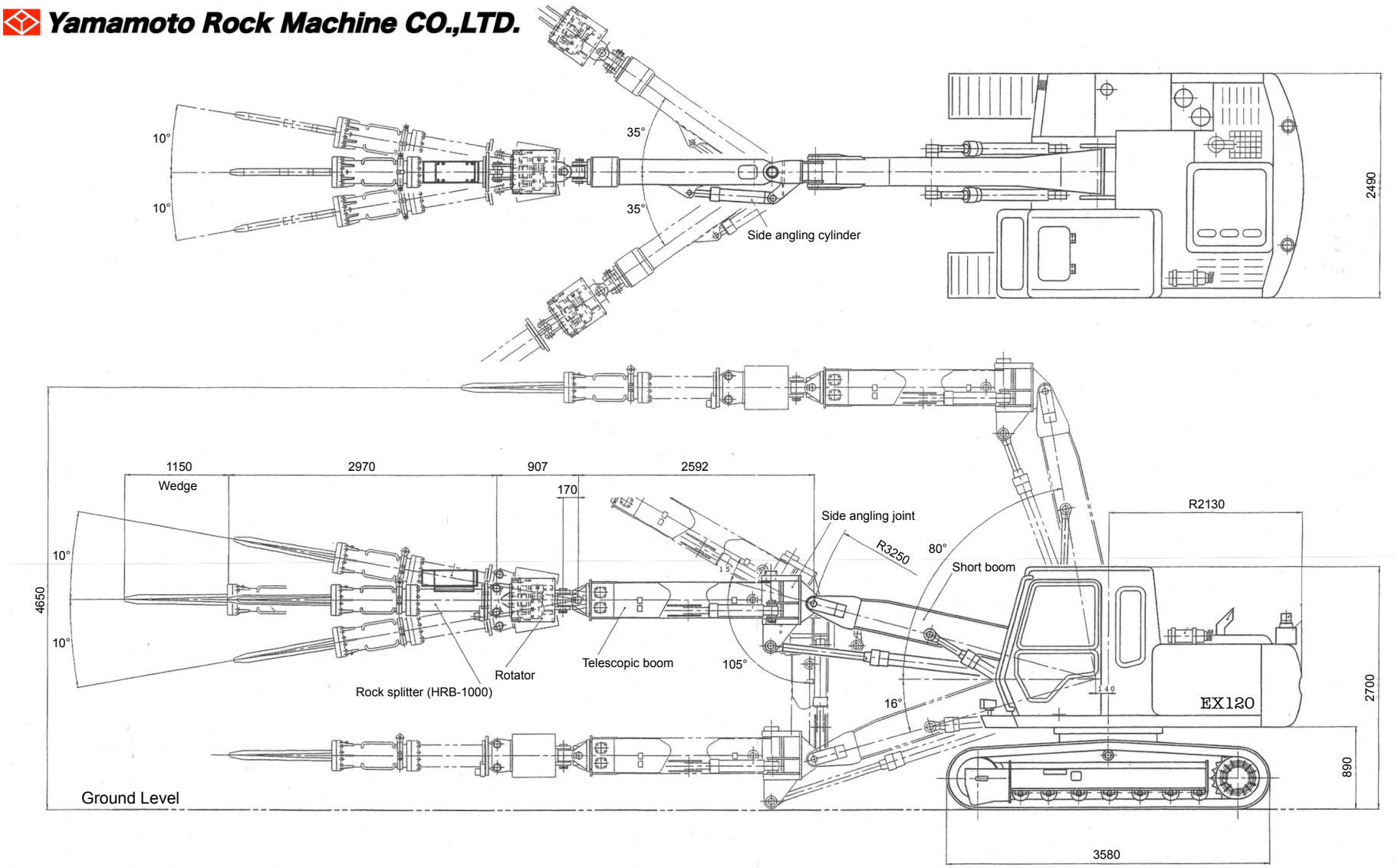

STM Construction Equipment	Yamamoto Ultra Large Rock Splitter with Carrier	YTB-1120